Compact Electric Actuated 3-Way Ball Valves

T-Port, 316 Stainless Steel, Full Port
1/4" to 3/4" NPT

SERIES
5668

Features

- Full Port 316SS diverter, selector, or mixing valve
- Silicone free with RTFE ball seats
- Triple PTFE/Viton live loaded stem seals, adjustable
- Valve anti-static device
- Industrial quality miniature actuator
- Visual valve position indicator
- Rugged aluminum Type 4X and IP67 weatherproof enclosure
- Heavy duty motor with overload protection
- Manual override
- Actuator approvals by CSA and CE

T-port Diverter Valve
Flow Pattern

Position 1 **Position 2**

Applications

Electric actuated flow diverter or selector valves are typically used to control the flow of water, air, oil and other media compatible with the materials of construction. Working pressure 1000 PSI at 100°F (38°C). Suitable for steam up to 25 PSI with optional high temperature kit. Vacuum service up to 29"Hg. Actuator designed for 60% duty cycle.

Operation

Electric actuated valve uses power-to-open (Pos. 2) and power-to-close (Pos.1), stays in the last known position with power failure. On receipt of a continuous voltage signal, the motor runs and via a rugged all metal gear drive rotates the ball 90°. The motor is automatically stopped by internal cams striking limit switches. On receipt of a reversing continuous signal, the motor turns in the opposite direction reversing the valve position. Electrical connection by prewired cable with flying leads (3 meter/9.8 feet)

Construction

Valve Body	316 stainless steel ASTM A351 CF8M
Ball/Stem	316 stainless steel
Ball Seats	RTFE (reinforced Teflon)
Stem Seals	PTFE / Viton
Anti-static Device	Ball to Stem (1/4 - 1-1/2") + Stem to Body (1-1/4" - 2")
Gear Drive	Rugged all metal flat and worm gears, self locking
Actuator Enclosure	Anti-corrosive aluminum alloy, Rated Type 4X/ IP67
Visual Valve Position Indicator	Yellow indicator with transparent clear cover
Fasteners	Stainless Steel
Auxiliary Limit Switches	2 x SPST (3A@125/250VAC,30VDC resistive load

Description

Electrically operated Full Port 3-way T-type flow pattern ball valve has four RTFE ball seats allowing for full pressure at any port. Leak free triple PTFE/Viton stem seal design. Features include compact size, rugged motor integral to actuator housing, all metal gears, manual override for emergency hand operation, visual valve position indicator and Type 4X/IP67 weatherproof enclosure.

Approvals

Actuators

- Actuators certified by CSA and CE
  - CSA models certified to UL429, CSA C22.2 and UL50E Type 4X enclosure
- CE Conformance– EN 60204-1:2006

Valves

- Design: API 608
- Testing: API 598
- Threaded Connection:
  ASME B1.20.1 (NPT)/ ISO 228-1/ BS21
- Pressure/Temperature Rating:
  ASME B16.34
- Marking: MSS SP-25
- CE Conformance– PED 2014/68/UE

Construction Features

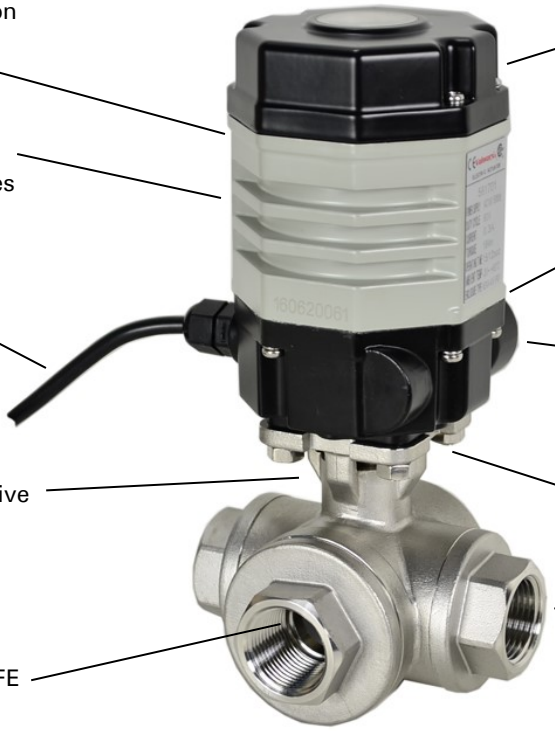

- Rugged aluminum corrosion resistant Type 4X/IP67 weatherproof enclosure
- Heavy duty integral motor design significantly reduces physical size of actuator
- Electrical connection by prewired cable (3 meter)
- Triple PTFE/ FKM (Viton) live loaded stem seal design, adjustable
- 316SS Ball and Stem, RTFE ball seats
- Auxiliary Limit Switches (2) for confirming valve position
- Self-locking all metal gear drive, no additional brake required
- Manual Override with protective cover
- Direct mount ISO5211 flange, no brackets required
- Full Port 316 stainless steel 3-way ball valve

Visual Valve Position Indicator

Pressure-Temperature*

Pressure Rating: 1000 PSI* (69 Bar), 25 PSI saturated steam with high temp kit, Vacuum 29in Hg

Ball Valve Temperature Rating: -4 to 392° F (-20 to 200° C)

Actuator Temperature Rating: -22 to +140° F (-30 to 60° C)

*See P/T chart

Pressure/Temperature Chart (PSI/°F)

P/T Chart					
PSI	1000	1000	900	700	0
°F	-4	104	167	212	392

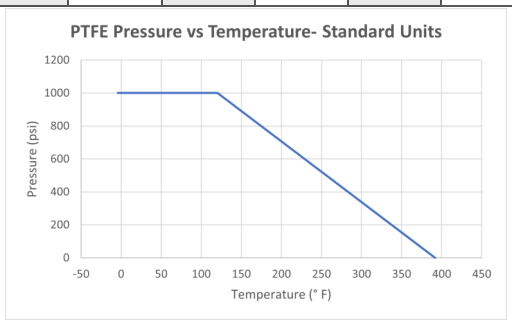

Pressure/Temperature Chart (Bar/°C)

P/T Chart					
Bar	69	69	62	48	0
°C	-20	40	75	100	200

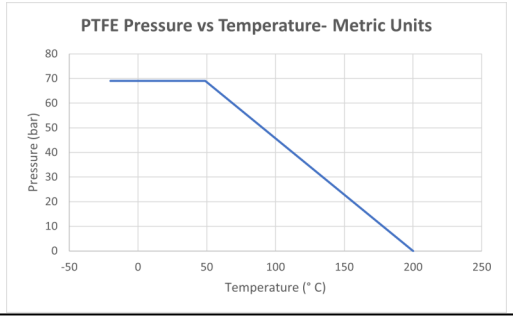

Specifications: On-Off Valves (English units)

Stock Number	Pipe Size (NPT)	Orifice Size (inch)	Cv Flow Factor	Pressure Max.(PSI)*	Cycle Time /90° (seconds)	Voltage	Current (amps)	Agency Approvals	Electrical Drawing
110 VAC ELECTRIC ACTUATED 3-WAY STAINLESS STEEL BALL VALVES: T-PORT									
566802C	1/4	0.43	5.0	1000	12	AC110 50/60Hz	0.3	CSA, CE	B
566803C	3/8	0.43	7.3	1000	12	AC110 50/60Hz	0.3	CSA, CE	B
566804C	1/2	0.63	8.9	1000	12	AC110 50/60Hz	0.3	CSA, CE	B
566806C	3/4	0.79	18.9	1000	12	AC110 50/60Hz	0.3	CSA, CE	B
24 VAC ELECTRIC ACTUATED 3-WAY STAINLESS STEEL BALL VALVES: T-PORT									
566813C	1/4	0.43	5.0	1000	12	AC24 50/60Hz	1.7	CSA, CE	B
566814C	3/8	0.43	7.3	1000	12	AC24 50/60Hz	1.7	CSA, CE	B
566815C	1/2	0.63	8.9	1000	12	AC24 50/60Hz	1.7	CSA, CE	B
566816C	3/4	0.79	18.9	1000	12	AC24 50/60Hz	1.7	CSA, CE	B
24 VDC ELECTRIC ACTUATED 3-WAY STAINLESS STEEL BALL VALVES: T-PORT									
566844C	1/4	0.43	5.0	1000	11	DC24	0.7	CSA, CE	G
566845C	3/8	0.43	7.3	1000	11	DC24	0.7	CSA, CE	G
566846C	1/2	0.63	8.9	1000	11	DC24	0.7	CSA, CE	G
566847C	3/4	0.79	18.9	1000	11	DC24	0.7	CSA, CE	G

** Pressure at 100º F (see P/T chart for maximum pressure at higher temperatures)*

Voltage Tolerance: AC +/- 10%, DC +/- 5%, Duty Cycle: 60%

Electric Actuated 3-Way T-port Valves

Valworx electric actuated 3-way T-Port valves use power-to -open (pos.2) and power-to-close (pos.1), stays in the last known position with loss of power. The actuator will rotate the output drive 90° to change the position of the ball valve. Limit switches automatically stop the motor/gear drive in either position 1 or position 2 as required.

Two auxiliary limit switches are provided as standard to confirm valve position.

Rugged gear drive system is made of all metal, self-locking, no motor brake required. A manual override is provided for use in setup or power failure situations.

A manual override is provided for use in setup or power failure situations. The override is operated with a standard hex wrench (included).

Robust aluminium alloy housing is corrosion-resistant and weatherproof. The enclosure is rated Type 4X and IP67. Heavy duty motor is integral to the actuator housing providing a small physical size to power ratio.

Electrical wiring is by prewired cable with flying leads (3 meters/ 9.8 feet).

Specifications: On-Off Valves (Metric units)

Stock Number	Pipe Size (NPT)	Orifice Size (mm)	Kv Flow Factor	Pressure Max.(Bar)*	Cycle Time /90° (seconds)	Voltage	Current (amps)	Agency Approvals	Electrical Drawing
110 VAC ELECTRIC ACTUATED 3-WAY STAINLESS STEEL BALL VALVES: T-PORT									
566802C	1/4	11	4.3	69	12	AC110 50/60Hz	0.3	CSA, CE	B
566803C	3/8	11	6.3	69	12	AC110 50/60Hz	0.3	CSA, CE	B
566804C	1/2	16	7.7	69	12	AC110 50/60Hz	0.3	CSA, CE	B
566806C	3/4	20	16.3	69	12	AC110 50/60Hz	0.3	CSA, CE	B
24 VAC ELECTRIC ACTUATED 3-WAY STAINLESS STEEL BALL VALVES: T-PORT									
566803C	1/4	11	4.3	69	12	AC24 50/60Hz	1.7	CSA, CE	B
566814C	3/8	11	6.3	69	12	AC24 50/60Hz	1.7	CSA, CE	B
566815C	1/2	16	7.7	69	12	AC24 50/60Hz	1.7	CSA, CE	B
566816C	3/4	20	16.3	69	12	AC24 50/60Hz	1.7	CSA, CE	B
24 VDC ELECTRIC ACTUATED 3-WAY STAINLESS STEEL BALL VALVES: T-PORT									
566844C	1/4	11	4.3	69	11	DC24	0.7	CSA, CE	G
566845C	3/8	11	6.3	69	11	DC24	0.7	CSA, CE	G
566846C	1/2	16	7.7	69	11	DC24	0.7	CSA, CE	G
566847C	3/4	20	16.3	69	11	DC24	0.7	CSA, CE	G

** Pressure at 38° C (see P/T chart for maximum pressure at higher temperatures)*

Voltage Tolerance: AC +/- 10%, DC +/- 5%, Duty Cycle: 60%

Electrical Wiring Diagrams

AC Voltages

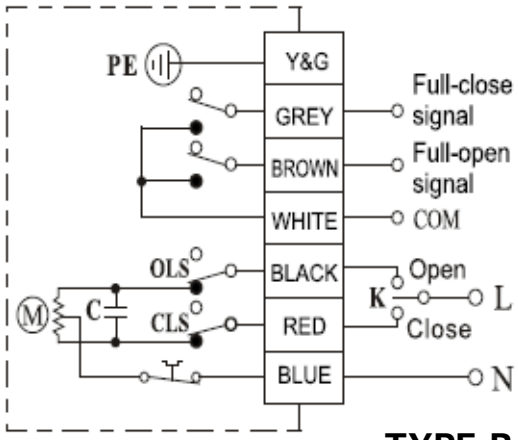

TYPE B

DC Voltages

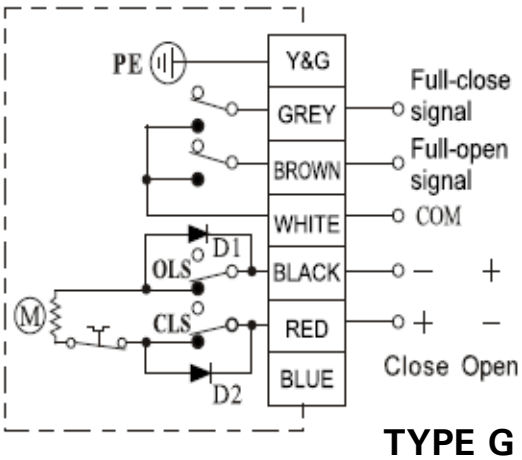

TYPE G

Dimensions

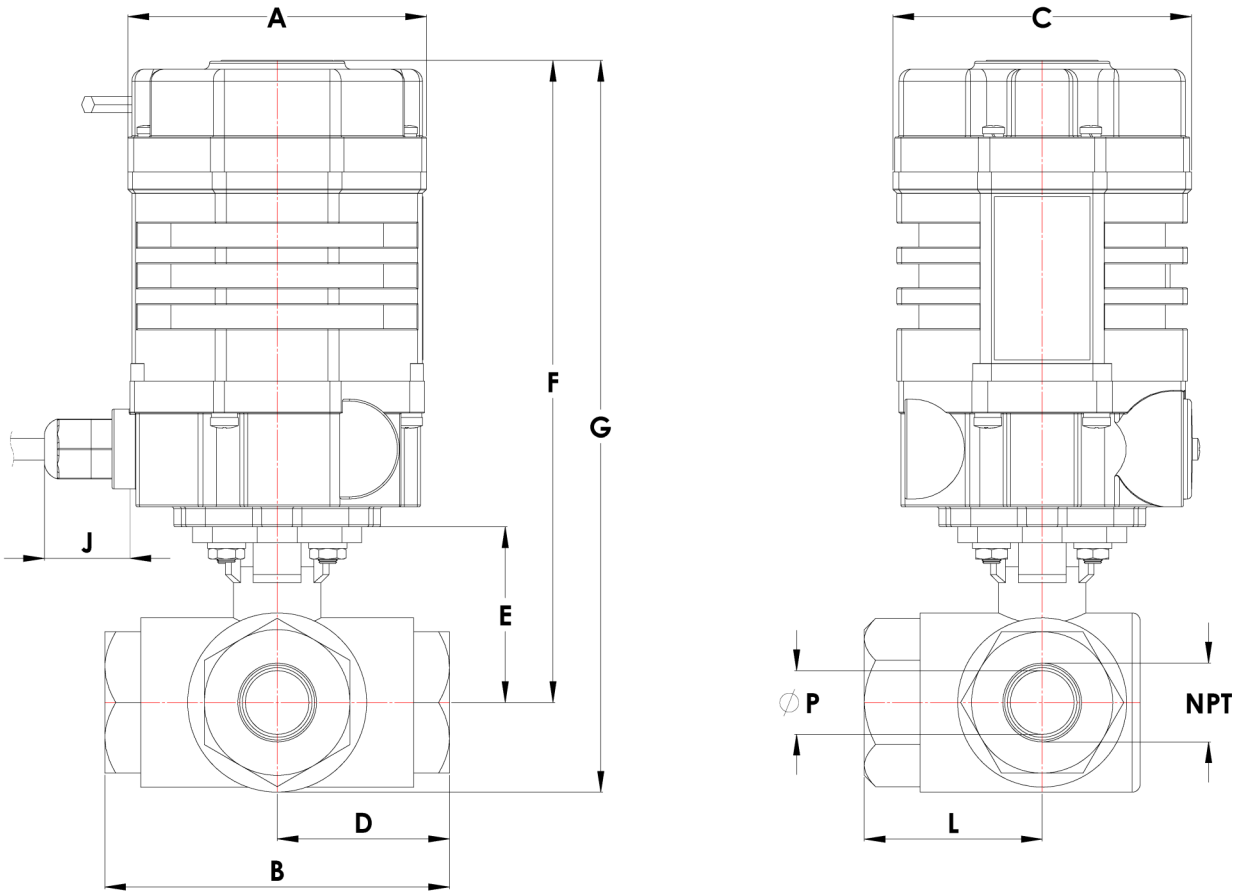

Pipe Size (NPT)		A	B	C	D	E	F	G	J	L	P	Weight
1/4	inch	2.8	2.9	2.9	1.5	1.5	6.1	6.9	0.9	1.5	0.4	4.3 lb
	mm	73.0	76.0	75.0	38.0	38.2	154.9	175.3	23.0	38.5	11.0	2.0 kg
3/8	inch	2.8	2.9	2.9	1.5	1.5	6.1	6.9	0.9	1.5	0.4	4.2 lb
	mm	73.0	76.0	75.0	38.0	38.2	154.9	175.3	23.0	38.5	11.0	1.9 kg
1/2	inch	2.8	3.3	2.9	1.7	1.8	6.1	7.3	0.9	1.8	0.6	5.0 lb
	mm	73.0	85.0	75.0	42.5	45.2	154.9	185.4	23.0	45.0	16.0	2.3 kg
3/4	inch	2.8	3.9	2.9	1.9	2.2	6.4	7.9	0.9	2.0	0.8	6.1 lb
	mm	73.0	98.0	75.0	49.0	56.5	162.6	200.7	23.0	51.5	20.0	2.8 kg