Compact Electric Actuated Ball Valves

2-way Lead Free Brass, Full Port
1/4" to 1-1/4" NPT

SERIES
5685

Features

- Industrial quality miniature actuator
- Full Port lead free brass ball valve
- Visual valve position indicator
- Rugged aluminum Type 4X and IP67 weatherproof enclosure
- Heavy duty motor with overload protection
- Manual override
- Two auxiliary limit switches included (on-off models)
- Energized PTFE ball seats for lower torque and longer life
- Leak free Triple PTFE/FKM stem seal packing
- EPS - Electronic Positioner System model available
- Actuator approvals by CSA and CE
- Valve certified NSF372 & NSF61 for potable/drinking water

Applications

On-off control of water, air, oil and other media compatible with the materials of construction. Ideal where lead free and NSF approved construction are required for potable drinking water as well as general industrial applications. Suitable for media temperatures up to 266° F and steam up to 25 PSI with optional high temperature kit. Vacuum service up to 29"Hg. EPS positioner is available for controlling flow using an analog input control signal. Actuator designed for 60% duty cycle.

Operation

Electric actuated valve uses power-to-open and power-to-close, stays in the last known position with loss of power. On receipt of a continuous voltage signal, the motor runs and via a rugged all metal gear system rotates the ball 90°. The motor is automatically stopped by internal cams striking limit switches. On receipt of a reversing continuous signal, the motor turns in the opposite direction reversing the valve position. Valves with EPS positioner use an analog input signal to control the position of the ball (flow). Electrical connection by prewired cable with flying leads (3 meter/9.8 feet)

Construction

Valve Body	Lead free brass C69300
Ball/Stem	316 stainless steel
Ball Seats	PTFE (Teflon) energized with FKM (Viton)
Stem Seals	PTFE (Teflon) with (2) additional FKM (Viton) seals
Gear Drive	Rugged all metal flat and worm gears, self locking
Actuator Enclosure	Anti-corrosive aluminum alloy, Rated Type 4X/ IP67
Visual Valve Position Indicator	Yellow indicator with transparent clear cover
Fasteners	Stainless Steel
Auxiliary Limit Switches	2 x SPST (3A@125VAC,30VDC resistive), on-off models

Description

Electric actuated full port lead free ball valves provide unrestricted flow and minimum pressure loss. Energized PTFE ball seats are designed for low torque and extended cycle life. Leak free stem seal design. Features include compact size, rugged motor integral to actuator housing, all metal gears, manual override for emergency hand operation, visual valve position indicator and Type 4X/IP67 weatherproof enclosure. Actuators with EPS positioner utilize a 4-20mA analog input signal to position the output drive anywhere between 0-90° and actuated valve flow can be controlled 0-100%

Approvals

Actuators

- Actuators certified by CSA and CE
  - CSA models certified to UL429, CSA C22.2 and UL50E Type 4X enclosure
  - CE Conformance– EN 60204-1:2006

Valves

- IAPMO RT certified to:
  - NSF/ANSI 372 - 2011 Drinking Water
  - NSF/ANSI 61 - 2015
  - Weighted average lead content <=0.25%
- Meets design MSS-SP-110

Construction Features

Rugged aluminum corrosion resistant Type 4X and IP67 weatherproof enclosure

Heavy duty integral motor design significantly reduces physical size of actuator

Electrical connection by prewired cable (3 meter)

316 stainless steel stem with PTFE and dual FKM (Viton) seals

316 stainless steel ball with energized PTFE seats for reduced torque and extended cycle life

Auxiliary Limit Switches (2) for confirming valve position, on-off versions

Self-locking all metal gear drive, no additional brake required

Manual Override with protective cover

Direct mount ISO5211 flange, no brackets required

Full Port lead free brass ball valve, certified for use with potable/drinking water

Visual Valve Position Indicator

Pressure-Temperature*

Pressure Rating: 600 PSI CWP (41 Bar) non-shock 1/4 to 1-1/4 NPT sizes
25 PSI saturated steam with high temp kit
29" Hg vacuum

Ball Valve Temperature Rating: -4 to 366° F (-20 to 186° C)

Actuator Temperature Rating: -22 to +140° F (-30 to 60° C)

*See P/T chart

Pressure/Temperature Chart (PSI/°F)

P/T Chart						
PSI	600	600	600	600	550	400
°F	0	50	100	176	200	266

Pressure/Temperature Chart (Bar/°C)

P/T Chart						
Bar	41	41	41	41	38	27
°C	-18	10	38	80	93	130

Specifications: On-Off Valves (English units)

Stock Number	Pipe Size (NPT)	Orifice Size (inch)	Cv Flow Factor	Pressure Max. (PSI)*	Cycle Time /90° (seconds)	Voltage	Current (amps)	Agency Approvals	Electrical Drawing
110 VAC ELECTRIC ACTUATED LF BRASS BALL VALVES: ON-OFF version									
568502	1/4	0.39	8	600	12	AC110 50/60Hz	0.3	CSA, CE	B
568503	3/8	0.50	10	600	12	AC110 50/60Hz	0.3	CSA, CE	B
568504	1/2	0.59	15	600	12	AC110 50/60Hz	0.3	CSA, CE	B
568506	3/4	0.75	35	600	12	AC110 50/60Hz	0.3	CSA, CE	B
568508	1	1.00	60	600	12	AC110 50/60Hz	0.3	CSA, CE	B
568510	1-1/4	1.22	89	600	12	AC110 50/60Hz	0.3	CSA, CE	B
24 VAC ELECTRIC ACTUATED LF BRASS BALL VALVES: ON-OFF version									
568513	1/4	0.39	8	600	12	AC24 50/60Hz	1.7	CSA, CE	B
568514	3/8	0.50	10	600	12	AC24 50/60Hz	1.7	CSA, CE	B
568515	1/2	0.59	15	600	12	AC24 50/60Hz	1.7	CSA, CE	B
568516	3/4	0.75	35	600	12	AC24 50/60Hz	1.7	CSA, CE	B
568517	1	1.00	60	600	12	AC24 50/60Hz	1.7	CSA, CE	B
568518	1-1/4	1.22	89	600	12	AC24 50/60Hz	1.7	CSA, CE	B
24 VDC ELECTRIC ACTUATED LF BRASS BALL VALVES: ON-OFF version									
568544	1/4	0.39	8	600	11	DC24	0.7	CSA, CE	G
568545	3/8	0.50	10	600	11	DC24	0.7	CSA, CE	G
568546	1/2	0.59	15	600	11	DC24	0.7	CSA, CE	G
568547	3/4	0.75	35	600	11	DC24	0.7	CSA, CE	G
568549	1	1.00	60	600	11	DC24	0.7	CSA, CE	G
568550	1-1/4	1.22	89	600	11	DC24	0.7	CSA, CE	G

** Pressure at 176° F (see P/T chart for maximum pressure at higher temperatures)*

Voltage Tolerance: AC +/- 10%, DC +/- 5%, Duty Cycle 60%

On-Off Electric Actuated Valves

Valworx electric actuated valves use power-to-open and power-to-close, stays in the last known position with loss of power. The actuator will rotate the output drive 90° to open or close the ball valve. Limit switches automatically stop the motor drive in either the open or closed position as required. Two auxiliary limit switches are provided as standard with on-off actuators to confirm valve open or closed position.

Rugged gear drive system is made of all metal, self-locking, no motor brake required. A manual override is provided for use in setup or power failure situations.

The override is operated with a standard hex wrench (included).

Robust aluminium alloy housing is corrosion-resistant and weatherproof. The enclosure is rated Type 4X and IP67. Heavy duty motor is integral to the actuator housing providing a small physical size to power ratio.

Electrical wiring is by prewired cable with flying leads.

Specifications: Valves with EPS Positioners (English units)

Stock Number	Pipe Size	Orifice Size	Cv Flow	Pressure	Cycle Time /90°	Voltage	Current	Agency	Electrical
110 VAC ELECTRIC ACTUATED LF BRASS BALL VALVES: EPS POSITIONER 4-20mA									
568555	1/4	0.39	8	600	12	AC110 50/60Hz	0.30	CSA, CE	E
568556	3/8	0.50	10	600	12	AC110 50/60Hz	0.30	CSA, CE	E
568557	1/2	0.59	15	600	12	AC110 50/60Hz	0.30	CSA, CE	E
568558	3/4	0.75	35	600	12	AC110 50/60Hz	0.30	CSA, CE	E
568559	1	1.00	60	600	12	AC110 50/60Hz	0.30	CSA, CE	E
568560	1-1/4	1.22	89	600	12	AC110 50/60Hz	0.30	CSA, CE	E

** Pressure at 176° F (see P/T chart for maximum pressure at higher temperatures)*

Voltage Tolerance: AC +/- 10%, Duty Cycle 60%

EPS - Electronic Positioning System

Valworx electric actuators with EPS- Electronic Positioning System provide an accurate valve positioning function whereby the movement of the actuator is controlled by a 4-20mA analog input control signal. Any change in the control input signal results in a corresponding and proportional change in the position of the actuator output drive.

An internal microprocessor on the EPS circuit board continuously monitors the analog input and output signals and compares them to the physical position via a precision potentiometer feedback system, moving the actuator as required to balance the signals.

The EPS system is calibrated for 0-90° rotation at the factory. A 4-20mA output monitoring signal is provided as standard. The following functions are standard on the EPS module:

- Factory Calibration
- 4-20mA position output monitoring signal
- Selectable fail mode: Actuator will fail closed, fail open or stop in place (default setup) with loss of input command signal, provided main power is maintained. Actuator will stop in last known position with loss of main power.
- Local electrical manual operation using onboard switches (located under the top cover).

Specifications: On-Off Valves (Metric units)

Stock Number	Pipe Size (NPT)	Orifice Size (mm)	Kv Flow Factor	Pressure Max. (Bar)*	Cycle Time /90° (seconds)	Voltage	Current (amps)	Agency Approvals	Electrical Drawing
110 VAC ELECTRIC ACTUATED LF BRASS BALL VALVES: ON-OFF version									
568502	1/4	10	5	40	12	AC110 50/60Hz	0.3	CSA, CE	B
568503	3/8	12.7	8.6	40	12	AC110 50/60Hz	0.3	CSA, CE	B
568504	1/2	15	13	40	12	AC110 50/60Hz	0.3	CSA, CE	B
568506	3/4	19	26	40	12	AC110 50/60Hz	0.3	CSA, CE	B
568508	1	25	52	40	12	AC110 50/60Hz	0.3	CSA, CE	B
568510	1-1/4	31	76	40	12	AC110 50/60Hz	0.3	CSA, CE	B
24 VAC ELECTRIC ACTUATED LF BRASS BALL VALVES: ON-OFF version									
568513	1/4	10	5	40	12	AC24 50/60Hz	1.7	CSA, CE	B
568514	3/8	12.7	8.6	40	12	AC24 50/60Hz	1.7	CSA, CE	B
568515	1/2	15	13	40	12	AC24 50/60Hz	1.7	CSA, CE	B
568516	3/4	19	26	40	12	AC24 50/60Hz	1.7	CSA, CE	B
568517	1	25	52	40	12	AC24 50/60Hz	1.7	CSA, CE	B
568518	1-1/4	31	76	40	12	AC24 50/60Hz	1.7	CSA, CE	B
24 VDC ELECTRIC ACTUATED LF BRASS BALL VALVES: ON-OFF version									
568544	1/4	10	5	40	11	DC24	0.7	CSA, CE	G
568545	3/8	12.7	8.6	40	11	DC24	0.7	CSA, CE	G
568546	1/2	15	13	40	11	DC24	0.7	CSA, CE	G
568547	3/4	19	26	40	11	DC24	0.7	CSA, CE	G
568549	1	25	52	40	11	DC24	0.7	CSA, CE	G
568550	1-1/4	31	76	40	11	DC24	0.7	CSA, CE	G

** Pressure at 80° C (see P/T chart for maximum pressure at higher temperatures)*

Specifications: Valves with EPS Positioners (Metric units)

Stock Number	Pipe Size (NPT)	Orifice Size (mm)	Kv Flow Factor	Pressure Max. (Bar)*	Cycle Time /90° (seconds)	Voltage	Current (amps)	Agency Approvals	Electrical Drawing
110 VAC ELECTRIC ACTUATED LF BRASS BALL VALVES: EPS POSITIONER 4-20mA									
568555	1/4	10	5	40	12	AC110 50/60Hz	0.3	CSA, CE	E
568556	3/8	12.7	8.6	40	12	AC110 50/60Hz	0.3	CSA, CE	E
568557	1/2	15	13	40	12	AC110 50/60Hz	0.3	CSA, CE	E
568558	3/4	19	26	40	12	AC110 50/60Hz	0.3	CSA, CE	E
568559	1	25	52	40	12	AC110 50/60Hz	0.3	CSA, CE	E
568560	1-1/4	31	76	40	12	AC110 50/60Hz	0.3	CSA, CE	E

** Pressure at 80° C (see P/T chart for maximum pressure at higher temperatures)*

Electrical Wiring Diagrams

ON-OFF Valves
AC Voltages

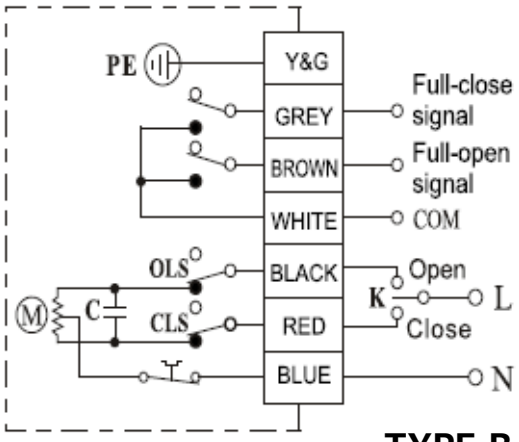

TYPE B

ON-OFF Valves
DC Voltages

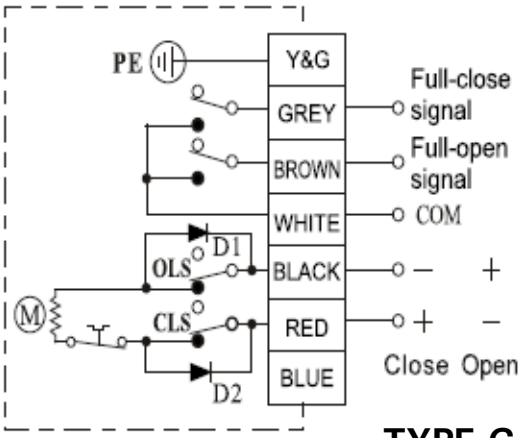

TYPE G

Actuated Valves with EPS Positioner
AC Voltages

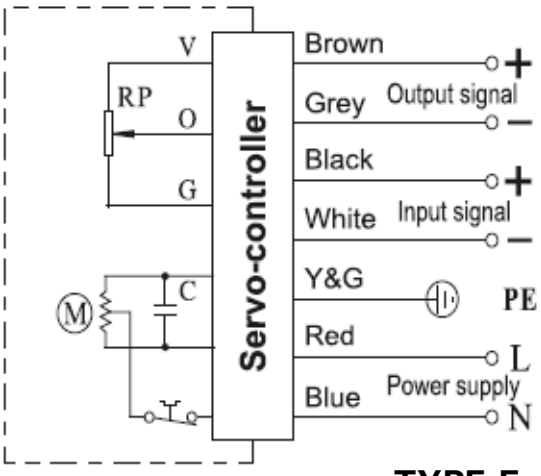

TYPE E

Dimensions

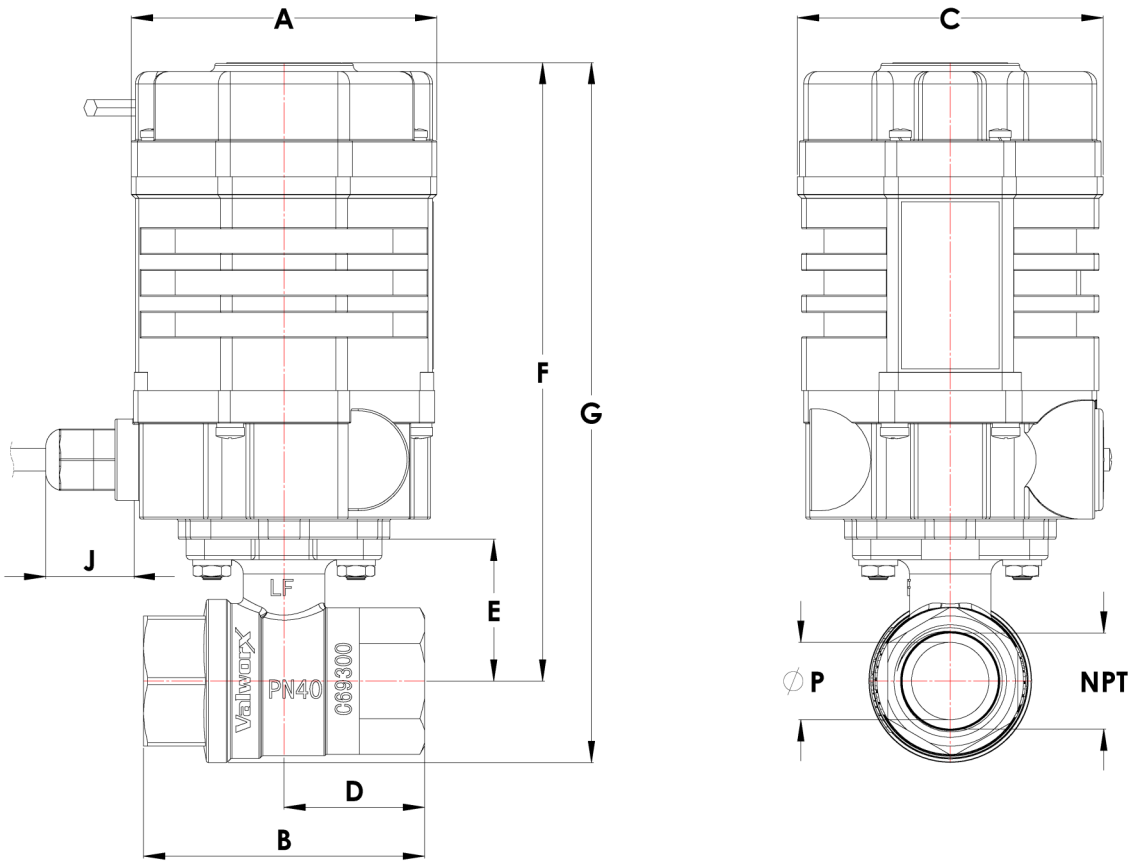

Pipe Size (NPT)		A	B	C	D	E	F	G	J	P	Weight
1/4	inch	2.95	1.87	2.95	0.94	0.87	5.47	5.95	0.85	0.39	3.15 lb
	mm	75	47.6	75	23.8	22	139	151.25	21.5	10	1.43 kg
3/8	inch	2.95	2.02	2.95	1.01	1.04	5.65	6.21	0.85	0.50	3.2 lb
	mm	75	51.4	75	25.7	26.5	143.5	157.75	21.5	12.7	1.45 kg
1/2	inch	2.95	2.50	2.95	1.25	1.26	5.87	6.55	0.85	0.59	3.4 lb
	mm	75	63.6	75	31.8	32	149	166.25	21.5	15	1.54 kg
3/4	inch	2.95	2.72	2.95	1.36	1.37	5.98	6.76	0.85	0.75	3.65 lb
	mm	75	69	75	34.5	34.8	151.8	171.8	21.5	19	1.66 kg
1	inch	2.95	3.32	2.95	1.66	1.75	6.36	186.25	0.85	1.00	4.2 lb
	mm	75	84.4	75	42.2	44.5	161.5	7.33	21.5	25	1.9 kg
1-1/4	inch	2.95	3.65	2.95	1.82	1.95	6.56	7.72	0.85	1.22	4.8 lb
	mm	75	92.7	75	46.3	49.5	166.5	196	21.5	31	2.17 kg